GEARED MOTOR

＊Drawing・Geared motor performance＊

With a brush

TP-3526E-IG・IGL・IM・IML series [All stage resin gear]

Output[w] 2.4

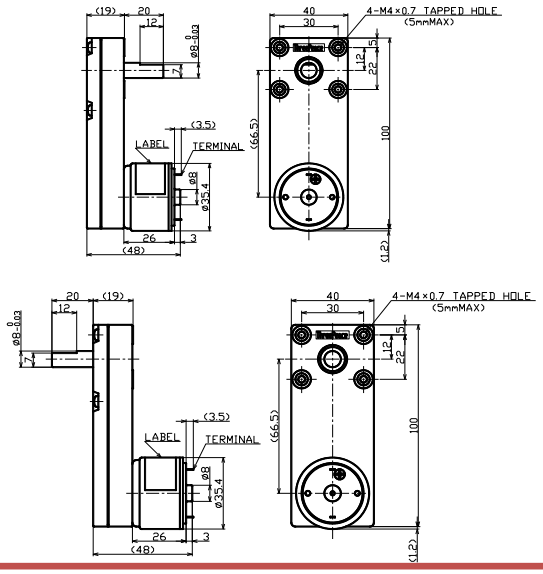

Gear ratio	1/100～1/500
Torque[mN・m]	245～588
Speed[r/min]	60.1～12.8
Voltage[V]	6

Unit[mm]

TP-3526A・B・C・J-CE series

Output[w] 1.4～4.2

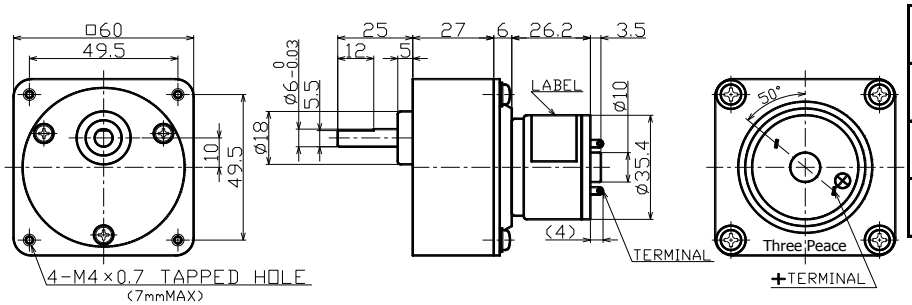

Gear ratio	1/5～1/1000
Torque[mN・m]	9.8～980
Speed[r/min]	1,639～4.3
Voltage[V]	12 ・ 24

Unit[mm]

TP-3526E-CE series

Output[w] 2.4

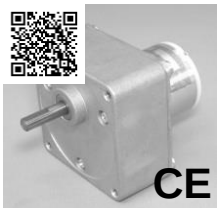

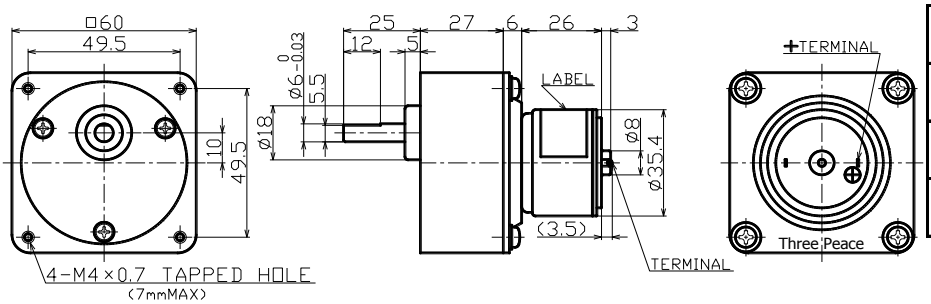

Gear ratio	1/5～1/1000
Torque[mN・m]	9.8～980
Speed[r/min]	1,251～1.8
Voltage[V]	6 ・ 12

Unit[mm]

TP-3526G-CE series

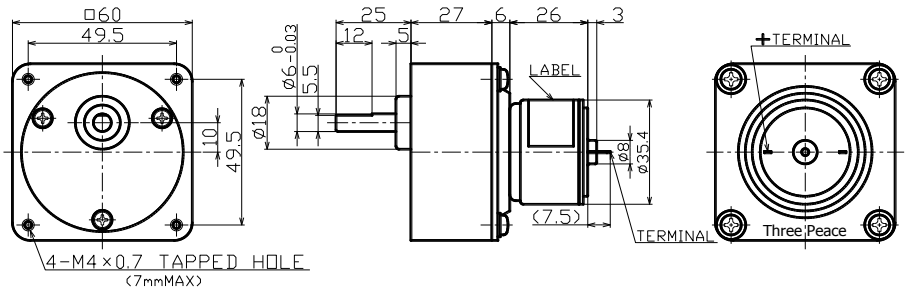

Unit[mm]